DIMNS MARKED DENOTES (S) SAFETY/REGULATION (F) CRITICAL FIT/FUNCTION (M) MAJOR FIT/ FUNCTION (M2) MINOR FIT/ FUNCTION

FINISH GRIND ∅	PLATING THK BEFORE PCG	PLATING THK AFTER PCG	∅ 'C'
∅ 10.928 ~ 10.938	24±4 micron	20±4 micron	∅ 10.960 ~ 10.986

NO. 34040925

AS PER STANDARD GWP0101

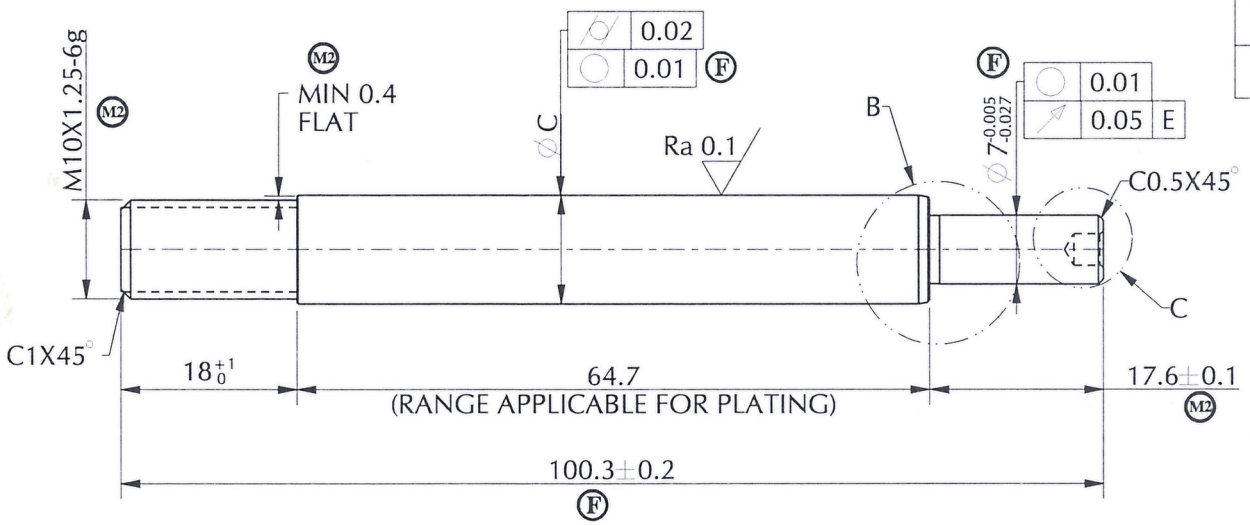

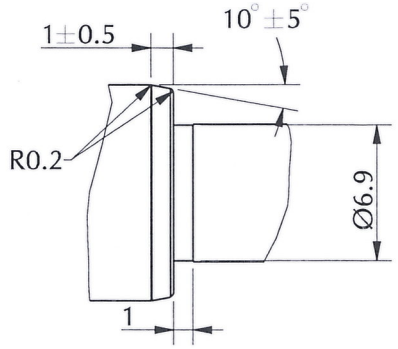

DETAIL : B

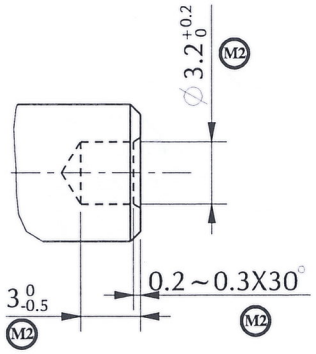

DETAIL : C

MASTER COPY ONLY IF RED GABRIEL NASHIK

NOTES:
1.TO BE GROUND TO FINISH SIZE AFTER PLATING
2.PLATING VALIDATION AS PER GSP0103
CHROME HARDNESS:HV800 MIN/25 gram LOAD.
CORROSION RESISTANCE:24 Hrs CASS TEST , RATING NO.7 MIN.
3.PART TO BE FREE FROM BURRS, CHATTER, SCRATCH, ABRASION & BRUISE
4.PART TO BE FREE FROM BURRS,PIN HOLES, ROUGH SURFACE & BLISTER AFTER PLATING

DATE	REV	ALTERATION	ERN NO
08.04.18	01	Rz REMOVED FROM DRAWING	18/054
08.10.17	00	RELEASED FOR PRODUCTION	N2061

SUPERSEDES : 34040925/REV/00

GENERAL TOLERANCE ASPER : PE/GT/001

DESIGN SOURCE REF.

RELEASE FOR: ☐ COSTING ☐ PROTOTYPE ☐ OTS ☐ PRE-PRODUCTION ■ PRODUCTION

GABRIEL INDIA LTD.

SCALE	SHEETS	FINISH:	MASS:
NTS	1 / 1	HARD CHROME PLATING	(68) gram

DRAWN BY RS Rajat DATE: 08.04.18

CHECKED BY MVA DATE: 08.04.18

APPROVED BY SAT DATE: 08.04.18

NAME:- PISTON ROD

MATERIAL:- 3401010 AS PER GP 136-5

PART NO:- 34040925 REV. 01

ALL DIMENSIONS ARE IN mm | NO MANUAL ALTERATION | DO NOT SCALE | IF IN DOUBT PLEASE ASK | SIZE : A4

FILE ARCHIVE LOCATION:

MODEL:- K-STAR RSA

CONFIDENTIAL: THIS DRAWING AND THE INFORMATION THEREIN ARE THE PROPERTY OF GABRIEL INDIA LTD., AND SHALL NOT BE REPRODUCED, COPIED RECORDED IN ANY MEDIA, USED FOR ANY OTHER PURPOSE OR DELIVERED AND/OR DISCLOSED TO ANY THIRD PARTY WITHOUT WRITTEN CONSENT OF GABRIEL.